OPTIMIZING LATENT SPACE DIRECTIONS FOR GAN-BASED LOCAL IMAGE EDITING

Ehsan Pajouheshgar
Tong Zhang
Sabine Süsstrunk

EPFL
icassp 2022 Singapore
IVRL

Semantic Image Editing

Generative Adversarial Networks (GANs)

StyleGAN2 Trained of FFHQ

Generative Adversarial Networks (GANs)

StyleGAN2 Trained of LSUN Cars

Generative Adversarial Networks (GANs)

BigGAN trained on ImageNet

Locally Effective Latent Space Directions (LELSD)

Locally Effective Latent Space Directions (LELSD)

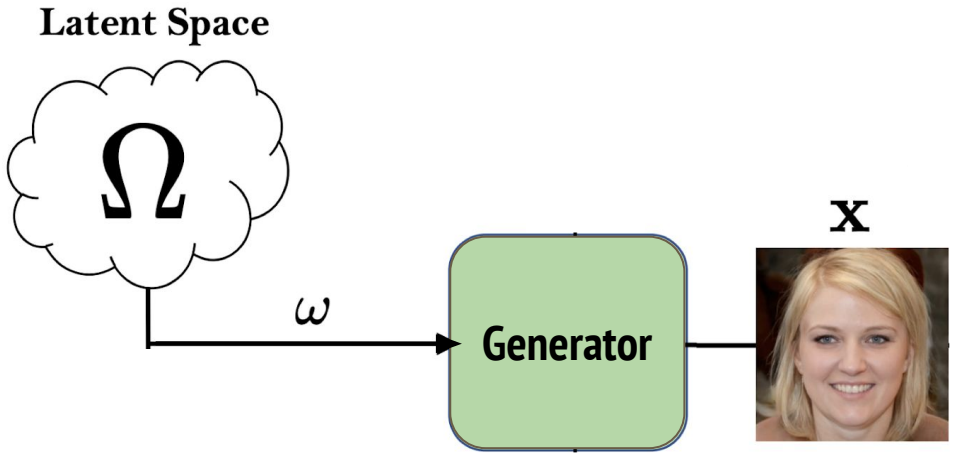

Locally Effective Latent Space Directions (LELSD)

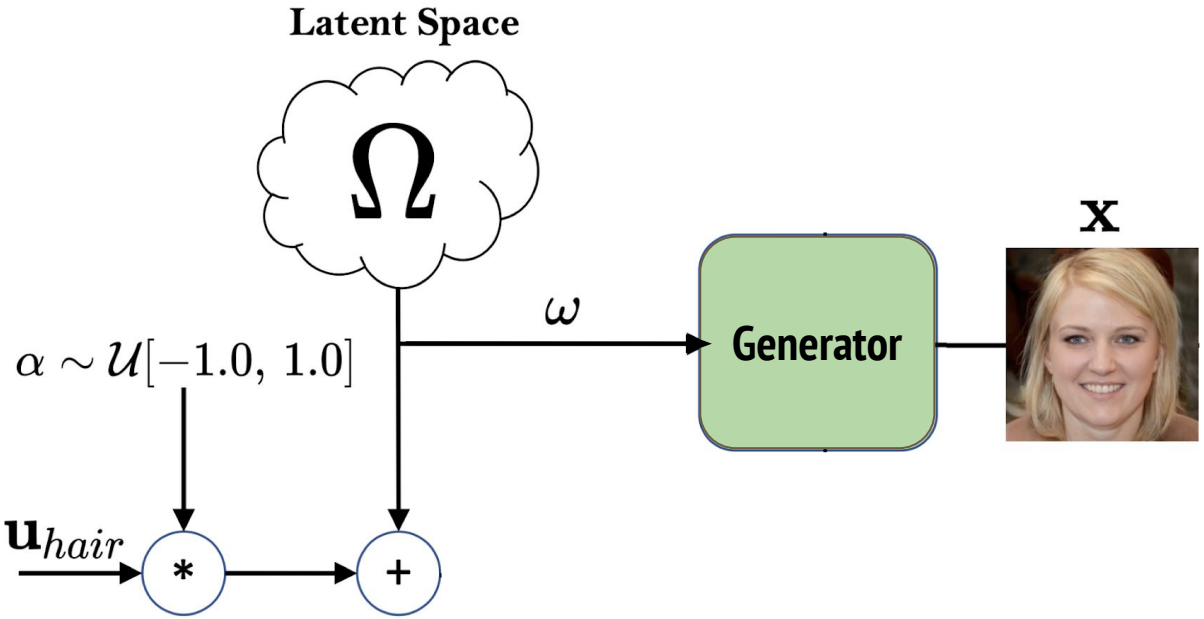

Locally Effective Latent Space Directions (LELSD)

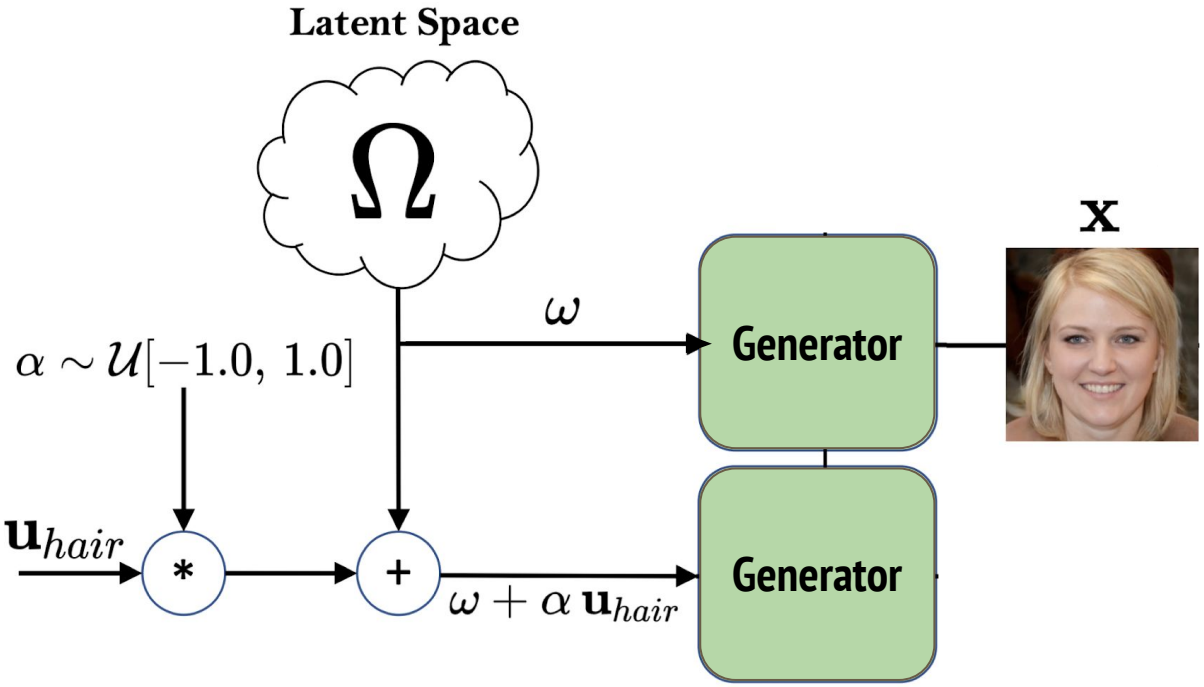

Locally Effective Latent Space Directions (LELSD)

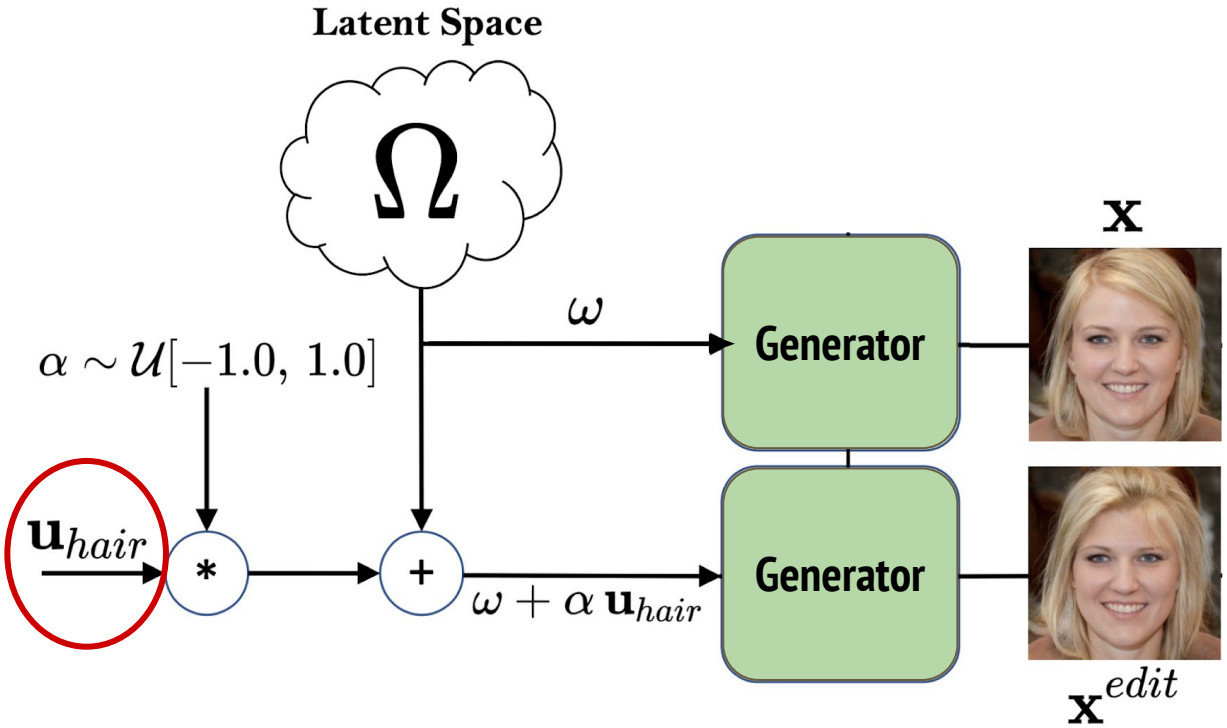

Locally Effective Latent Space Directions (LELSD)

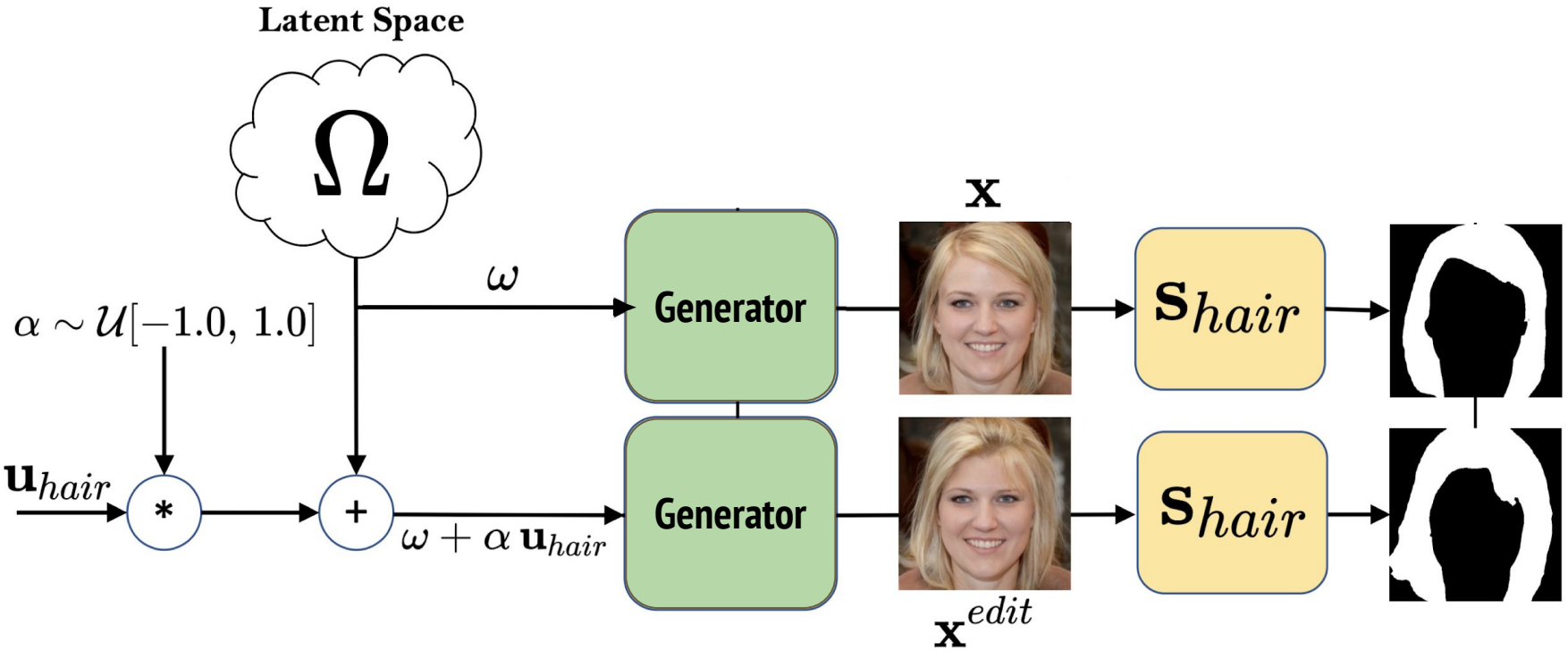

Locally Effective Latent Space Directions (LELSD)

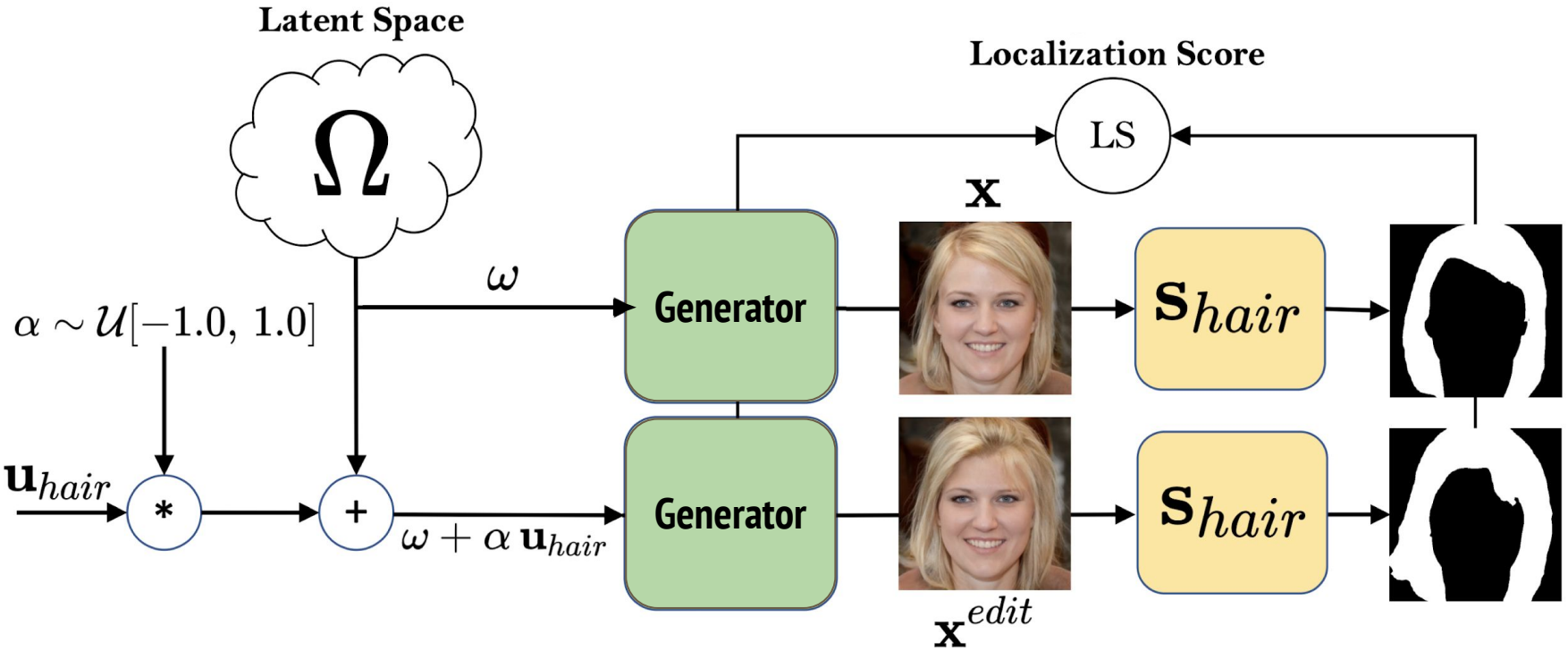

Locally Effective Latent Space Directions (LELSD)

$$LS(\mathbf{u}) = \frac{\sum_{i,j} \overset{\downarrow}{\tilde{\mathbf{s}}_c}(\mathbf{x}, \mathbf{x}^{edit}) \odot |\mathbf{r} - \mathbf{r}^{edit}(\mathbf{u})|^2}{\sum_{i,j} |\mathbf{r} - \mathbf{r}^{edit}(\mathbf{u})|^2}$$

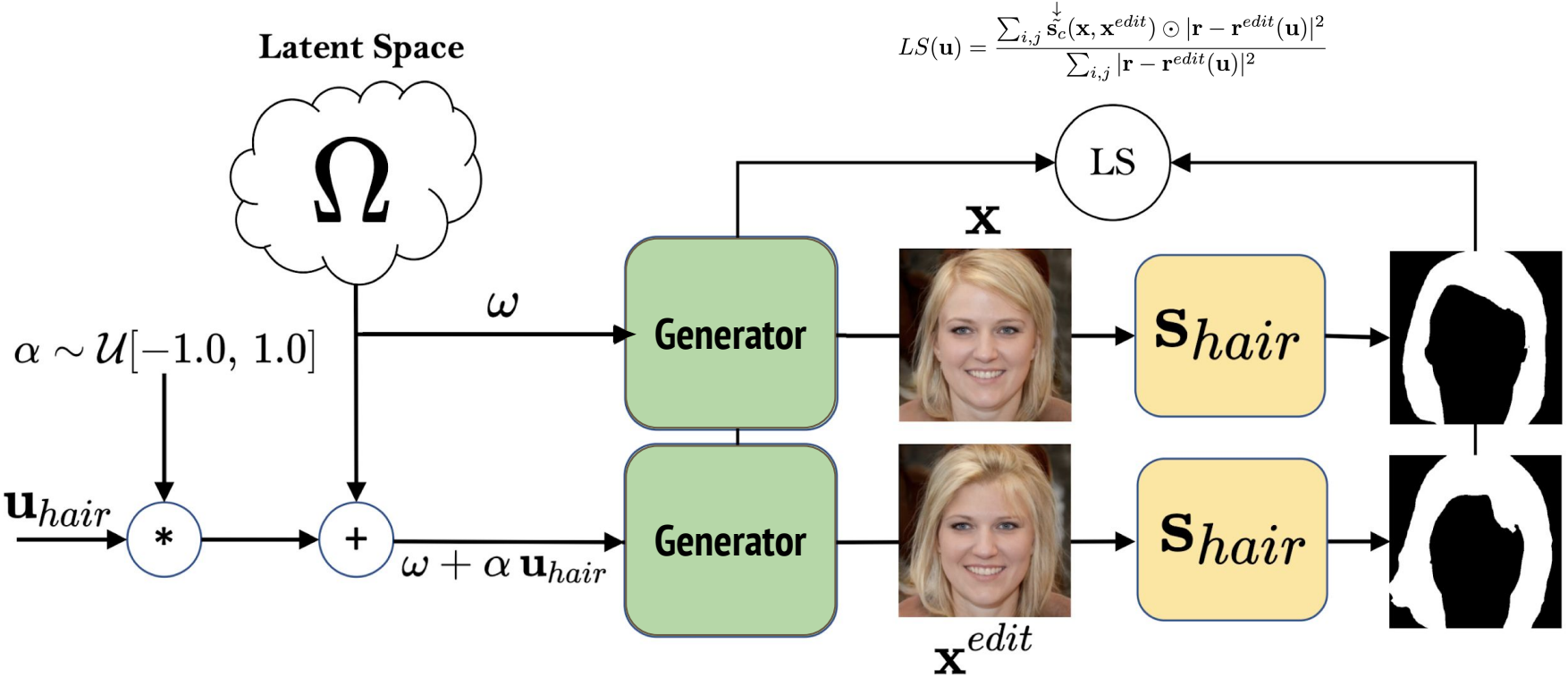

EPFL

Locally Effective Latent Space Directions (LELSD)

$$LS(\mathbf{u}) = \frac{\sum_{i,j} \overset{\downarrow}{\tilde{\mathbf{s}}_c}(\mathbf{x}, \mathbf{x}^{edit}) \odot |\mathbf{r} - \mathbf{r}^{edit}(\mathbf{u})|^2}{\sum_{i,j} |\mathbf{r} - \mathbf{r}^{edit}(\mathbf{u})|^2}$$

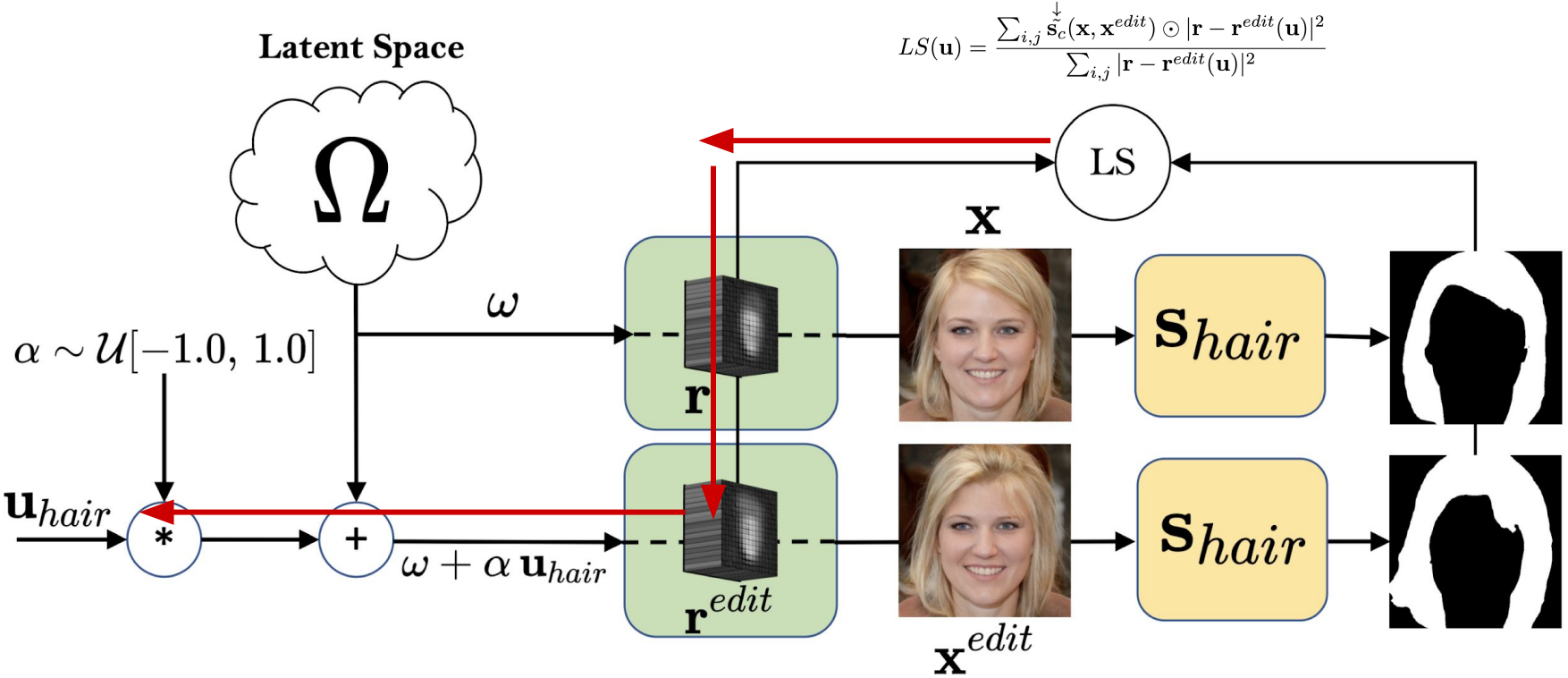

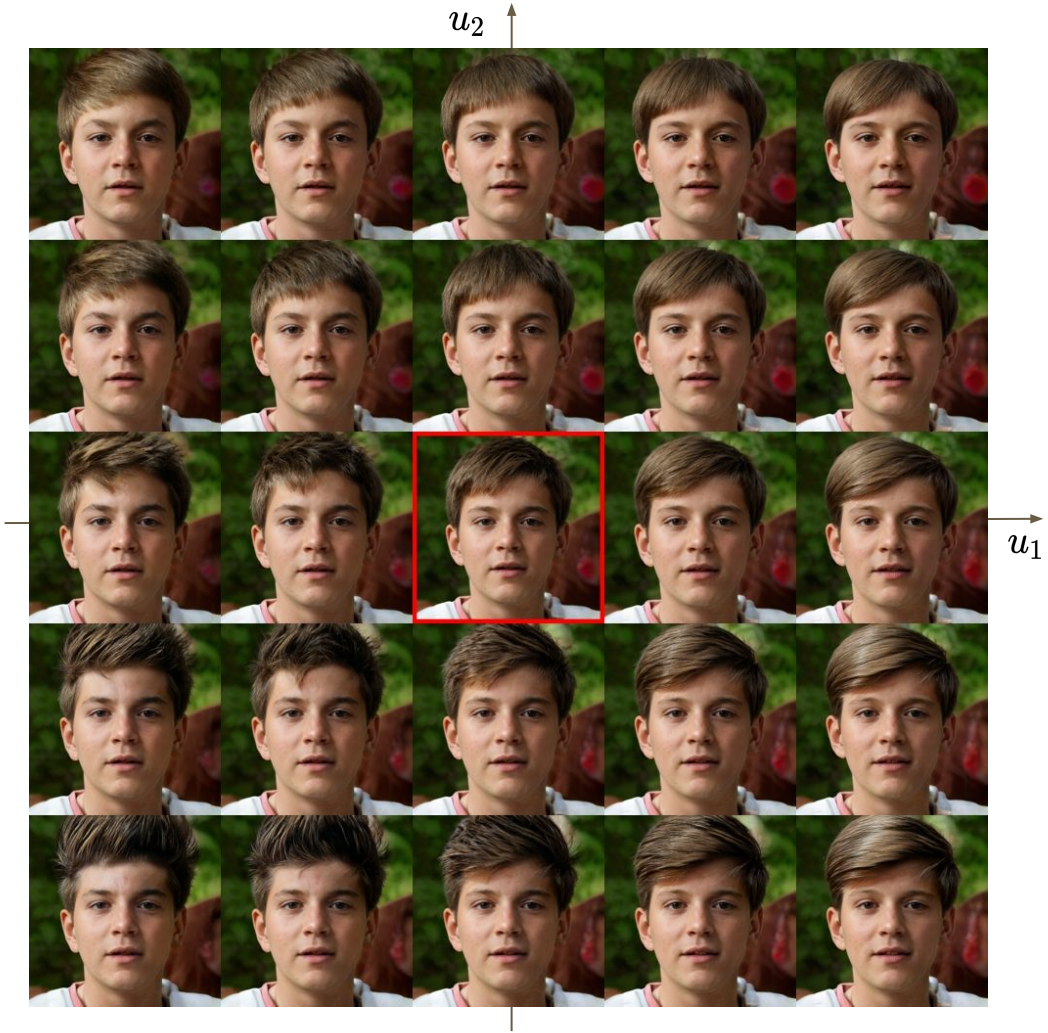
u_2
u_1

$$\left(4^2 - 8^2\right)$$

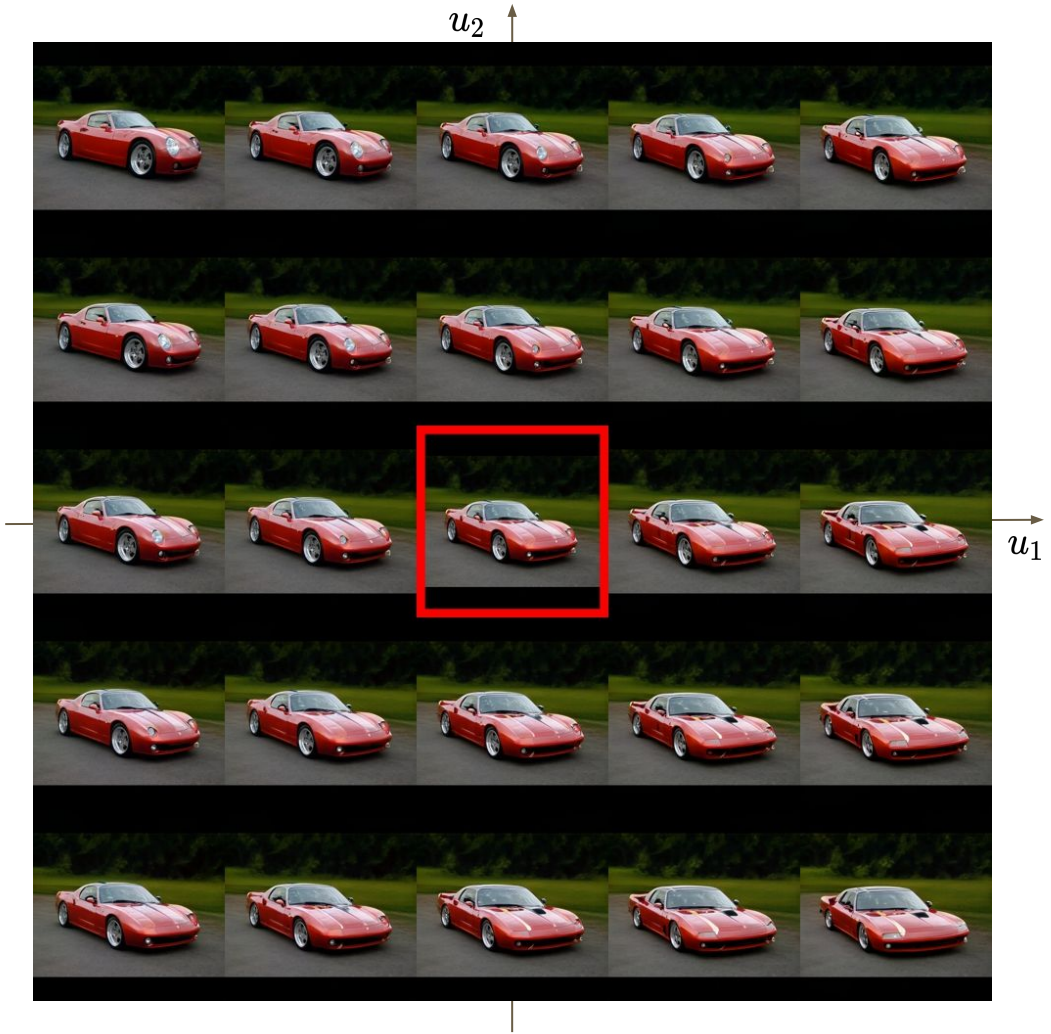

EPFL

$$\left(16^2 - 32^2\right)$$

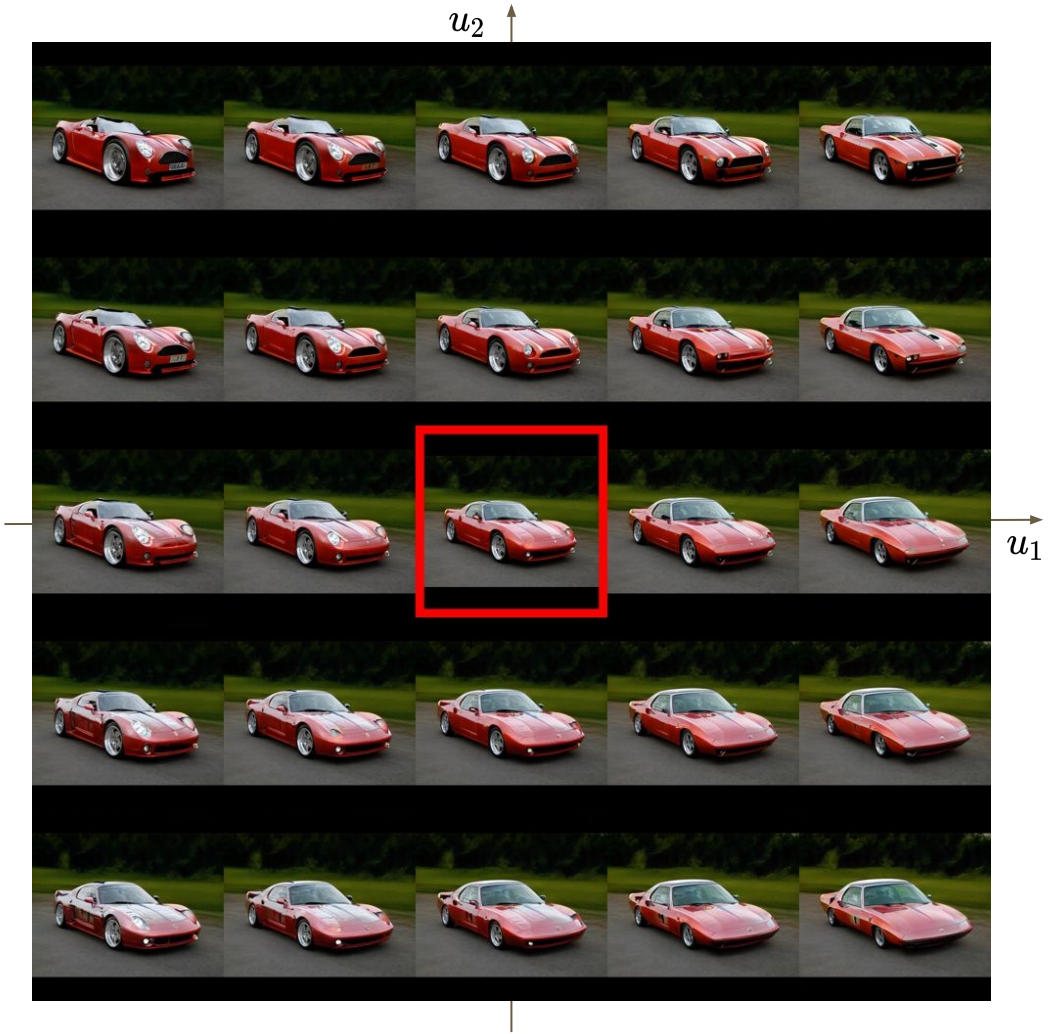

$$\left(64^2 - 128^2\right)$$

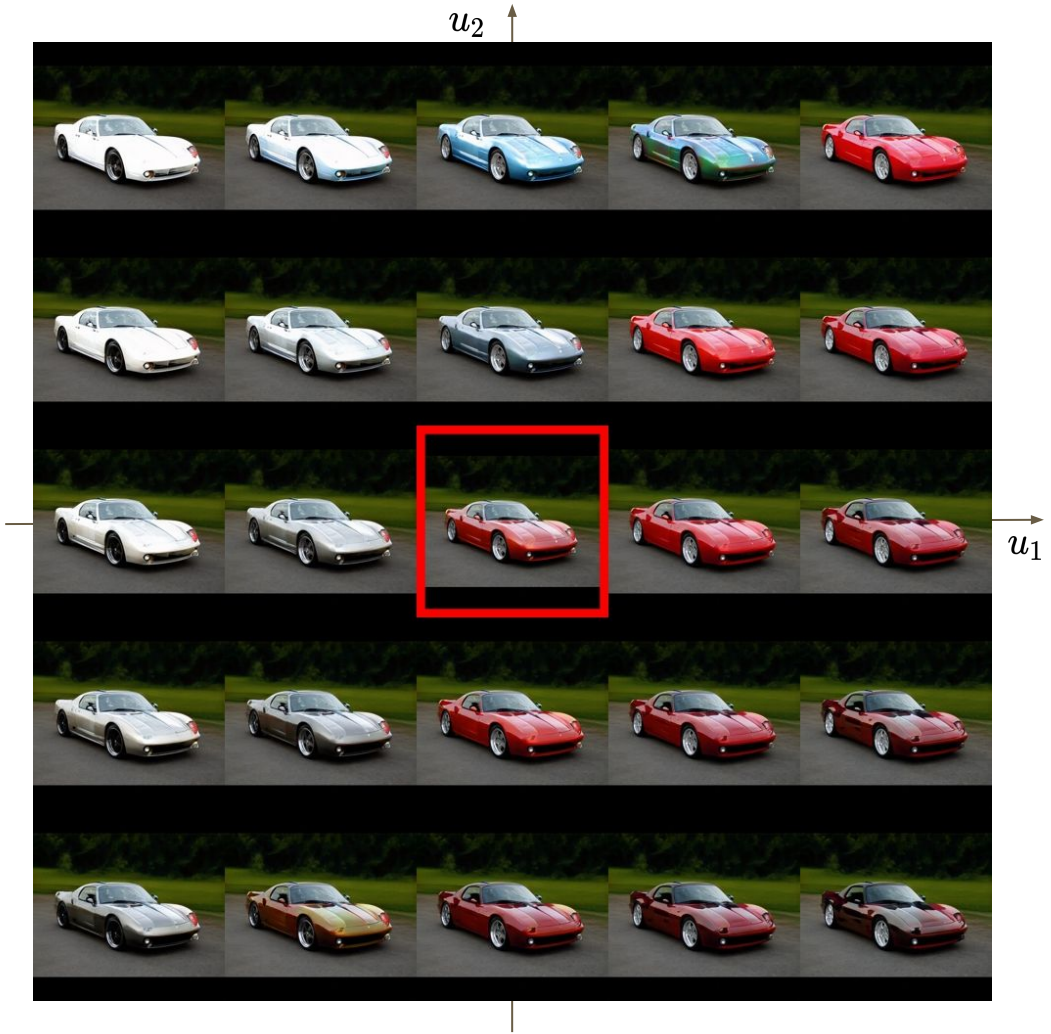

Sequential editing of real photos

Original

Sequential editing of real photos

Original Inverted

Sequential editing of real photos

Sequential editing of real photos

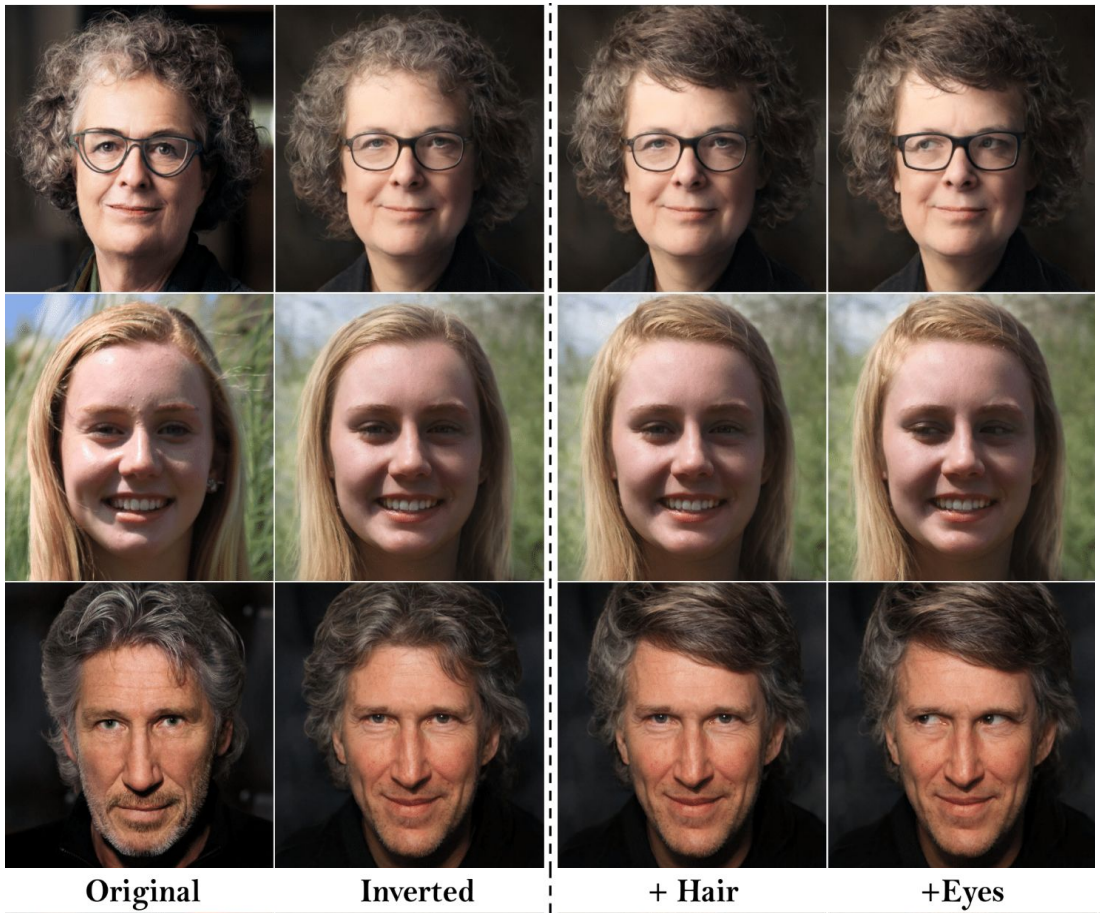

Sequential editing of real photos

Thank you for watching!

EPFL

icassp 2022 Singapore

IVRL